Bolts tightening torque

COPY COMPLIANT to the original document resident on the computer system at the time of printing

Index

1. Purpose & Scope 3

2. Abbreviations....3

3. General procedure: description 4

4. Calculation method....5

4.1. Tightening torque formulation 5

4.2. Friction coefficient....8

5. Acceptance Criteria 9

6. References 10

7. Appendix A. Case study 11

7.1. Case study: job T70994.008-20485....11

7.2. Case study: job P30691.002-20406 20

7.3. Case study: job P30691.005-20409 25

7.4. Experimental campaign 40

8. Appendix B. Tightening torque tables 45

COPY COMPLIANT to the original document resident on the computer system at the time of printing

1. Purpose & Scope

This document defines the guidelines to evaluate the tightening torque to apply when serrating bolts.

This procedure is applicable to pumps axially split (BB1 and BB3) to define the tightening torque of studs and guarantee the sealing between the casing and the cover in contact. It is also applicable to radially split BB4 pumps to define the tightening torque of bolts used to maintain interstage casings, suction and discharge in contact.

This procedure is applicable to the Nova Milanese and La Spezia plants.

2. Abbreviations

A_r	Resistant section
BB	Between Bearing
d, D	Diameter
d_m	Mean diameter
d_n	Nominal diameter
d_p	Pitch diameter
d_r	Root diameter
E	Young's modulus
f	Friction coefficient between threads
f_c	Friction coefficient between planes
L	Length
L	Lead
n, N	Normal force to thread
n	Number of threads
p	Pitch
q, Q	Tangential force
R_p	Weight average radius
T	Torque
w, W	Axial force
α_n	Thread angle

COPY COMPLIANT to the original document resident on the computer system at the time of printing

λ	Lead angle
φ'	Friction angle
σ_{yield}	Limit yield strength

3. General procedure: description

Figure 1 shows the standard geometry of screw threads used on fasteners. The pitch diameter, d_p, is the diameter of a cylinder on a perfect thread where the width of the thread and the groove are equal. The stress area is based on the average of the pitch and root diameters. It approximates the smallest possible fracture area, considering the presence of the thread.

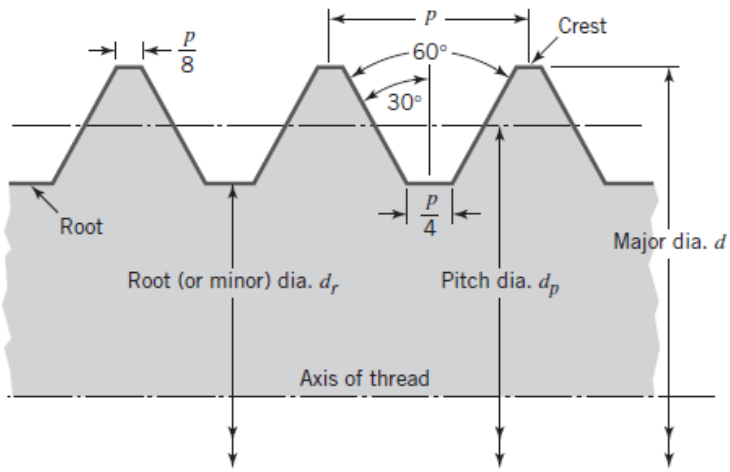

Figure 1: Standard thread geometry.

Generally, bolts and screws have a single thread. In this case, lead (L) and pitch (p) coincide.

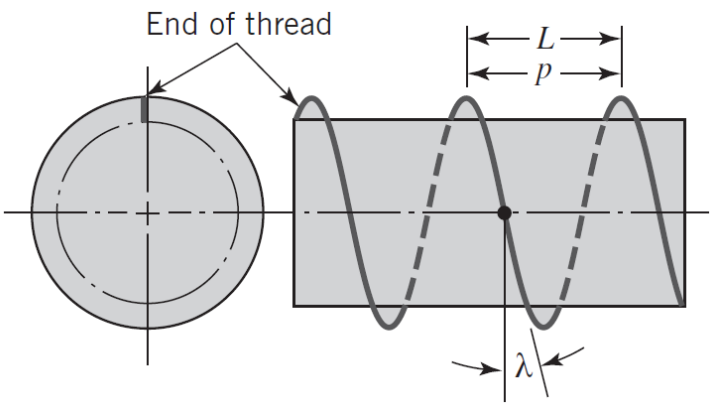

Figure 2: Helical threads of pitch p, lead L and lead angle λ.

COPY COMPLIANT to the original document resident on the computer system at the time of printing

4. Calculation method

4.1. Tightening torque formulation

Figure 3 represents a portion of one turn of the screw thread. If a full turn were completed, a triangle would be formed, illustrating the relationship:

$$\tan \lambda = \frac{L}{\pi d_m}$$

Where:

- $\lambda = lead\ angle$
- $L = lead$
- $d_m = mean\ diameter\ of\ thread\ contact$

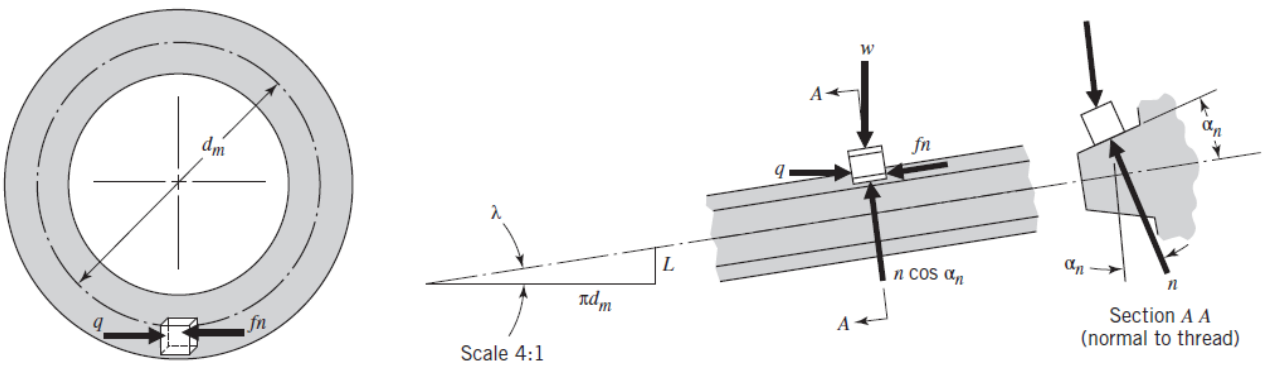

Figure 3: Screw thread forces.

A segment of the nut is represented in *Figure 3* by the small block subjected to load w (a portion of the total axial load W), normal force n (shown in true view at the lower right), friction force fn, and tangential force q. Note that force q times $d_m/2$ represents the torque applied to the nut segment.

Summing up tangential forces acting on the block gives:

$$\sum F_t = 0 \rightarrow q - n(f\cos\lambda + \cos\alpha_n \sin\lambda) = 0$$

Summing axial forces gives:

$$\sum F_a = 0 \rightarrow w + n(f\sin\lambda - \cos\alpha_n \cos\lambda) = 0$$

Combining both equations,

$$q = w\frac{f\cos\lambda + \cos\alpha_n \sin\lambda}{\cos\alpha_n \cos\lambda - f\sin\lambda}$$

COPY COMPLIANT to the original document resident on the computer system at the time of printing

As noted, the torque corresponding to force q is $q\left(d_m/2\right)$. Since the small block represents a typical segment of the nut's thread, integration over the entire thread surface in contact results in the same equations except that q, w and n are replaced by Q, W, and N, where the latter represents the total tangential, vertical and normal loads, respectively acting on the thread. Thus, the equation for torque required to load W is:

$$T = Q\frac{d_m}{2} = \frac{Wd_m}{2} \cdot \frac{f\cos\lambda + \cos\alpha_n \sin\lambda}{\cos\alpha_n \cos\lambda - f\sin\lambda}$$

If numerator and denominator are divided by $\cos\lambda$:

$$T = \frac{Wd_m}{2} \cdot \frac{f + \cos\alpha_n \tan\lambda}{\cos\alpha_n - f\tan\lambda}$$

Since for the friction angle the relation $\tan\varphi' = \frac{f}{\cos\alpha_n}$ is valid:

$$T = \frac{Wd_m}{2} \cdot \frac{\tan\varphi' + \tan\lambda}{1 - \tan\varphi' \cdot \tan\lambda} = \frac{Wd_m}{2}\tan\left(\lambda + \varphi'\right)$$

If λ and φ' are relatively small:

$$\tan\left(\lambda + \varphi'\right) \approx \tan(\lambda) + \tan\left(\varphi'\right)$$

The expression for the torque results:

$$T = \frac{Wd_m}{2}\left(\tan(\lambda) + \tan\left(\varphi'\right)\right) = W\left(\frac{f}{\cos\alpha_n} \cdot \frac{d_m}{2} + \frac{L}{2\pi}\right)$$

In case of bolts and screws with a single thread $L = p$, the equation is:

$$T = W\left(\frac{f}{\cos\alpha_n} \cdot \frac{d_m}{2} + \frac{p}{2\pi}\right)$$

Most applications require a thrust collar between stationary and rotating members. In many cases, a simple thrust washer is used. If the coefficient of friction of the collar washer is f_c, then the added torque required to overcome collar friction is:

$$T_p = W \cdot f_c \cdot R_p$$

COPY COMPLIANT to the original document resident on the computer system at the time of printing

Where:

- R_P is the weighted average radius (*Figure 4*) defined as:

$$R_P = \frac{2}{3} \cdot \frac{\left(\frac{1}{2}s\right)^3 - \left(\frac{1}{2}D\right)^3}{\left(\frac{1}{2}s\right)^2 - \left(\frac{1}{2}D\right)^2}$$

- s is the diameter of the nut.
- D is the diameter of the hole within which the screw engages in the bolted connection. In general, it is the washer internal diameter.

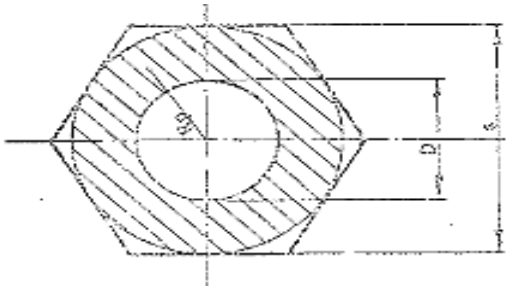

Figure 4: Weighted average radius.

With a negligible error (less than 2%), R_P can be defined as:

$$R_P = \frac{s + D}{4}$$

The total torque required to guarantee a load W is:

$$T = W\left(\frac{f}{\cos \alpha_n} \cdot \frac{d_m}{2} + \frac{p}{2\pi} + f_c R_P\right)$$

The tightening torque is composed of three terms:

- $T_f = W\left(\frac{f}{\cos \alpha_n} \cdot \frac{d_m}{2}\right)$ that is related to the torque necessary to win the friction in threads.
- $T_p = W(f_c R_P)$ that is the torque necessary to win the friction between the plane and the nut.
- $T_u = W\left(\frac{p}{2\pi}\right)$ that serves to tension the screw and ensure tightening.

COPY COMPLIANT to the original document resident on the computer system at the time of printing

Everyone represents a quote of the total torque T. With a good approximation, the tightening torque is distributed as follows:

$$T_f \approx 40\% \cdot T$$

$$T_p \approx 50\% \cdot T$$

$$T_f \approx 10\% \cdot T$$

Let's consider the coefficients of friction f and f_c equal, and $\alpha_n = 30°$ (ISO threads), the expression of torque assumes the following form:

$$T = W\left(f \cdot \left(0.578 d_m + R_P\right) + 0.16p\right)$$

4.2. Friction coefficient

As shown in Chapter *7 "Appendix A. Case study"*, the friction coefficient strongly depends on the casing and bolt materials, and also on the presence of lubricants.

Table 1 reports the suggested friction coefficients for different pairs of casing and bolt materials when lubricant is applied.

- Carbon steel/ 4140 alloy steel friction coefficient was obtained through the case study detailed in Chapter *7.1 "Case study: job T70994.008-20485".*
- 12% CR/ 4140 alloy steel friction coefficient was assumed to be equal to the mean value of the friction coefficient between Carbon steel/ 4140 alloy steel and Super Duplex/ Super Duplex approximated for defect. (**)
- 316 AUS/ 4140 alloy steel friction coefficient was assumed to be equal to the one of Carbon steel/ 4140 alloy steel because there is no data (literature or experimental) available (*).
- Duplex/ Duplex friction coefficient was assumed to be equal to the one of Super Duplex/ Super Duplex because there is no data (literature or experimental) available. (*)
- Duplex/ 4140 alloy steel friction coefficient was assumed to be equal to the mean value of the friction coefficient between Carbon steel/ 4140 alloy steel and Super Duplex/ Super Duplex approximated for defect. (**)
- Super duplex/ Super duplex friction coefficient was obtained through the case study detailed in Chapters *7.2 "Case study: job P30691.002-20406"* and *7.3 "Case study: job P30691.005-20409".*
- Super duplex/ 4140 alloy steel friction coefficient was assumed to be equal to the mean value of the friction coefficient between Carbon steel/ 4140 alloy steel and Super Duplex/ Super Duplex approximated for defect. (**)

COPY COMPLIANT to the original document resident on the computer system at the time of printing

Table 1: Friction coefficients based on the casing and bolt materials and presence of lubricant.

Lubricant	Pressure casing	Bolt and studs	Friction coefficient
YES	Carbon steel	4140 alloy steel	***0.10***
YES	12% CR	4140 alloy steel	***0.15 (**)***
YES	316 AUS	4140 alloy steel	***0.10 (*)***
YES	Duplex	Duplex	***0.20***
YES	Duplex	4140 alloy steel	***0.15 (**)***
YES	Super duplex	Super duplex	***0.20***
YES	Super duplex	4140 alloy steel	***0.15 (**)***

In case lubricant was not applied, the friction coefficient used to define the tightening torque should be increased by 50% respectively to the ones reported in *Table 1*.

For bolts and studs coated with PTFE or Teflon and for those galvanized, do not apply lubricant. Use a friction coefficient of 50% greater than the one reported in *Table 1* and reduce the tightening torque by 20%.

5. Acceptance Criteria

Apply a tightening torque that gives a preload equal to 70% of the stud's yield strength limit. Do not exceed 80% of this value. Use a bolt of bigger size to improve the seal between bodies.

$$\frac{W}{\sigma_{yield,\,stud} \cdot A_r} \leq 80\% \ (70\% \ suggested)$$

Preload should not exceed 70% of the maximum load admissible on the lead screw (W_{max}).

$$\frac{W}{W_{max}} = \frac{W}{\pi \cdot d_n \cdot (0.75 \cdot n \cdot p) \cdot \left(\frac{\sqrt{3}}{3}\sigma_{yield,casing}\right)} \leq 70\%$$

Where:

- d_n is the nominal diameter of the lead screw.
- n is the number of threads in contact.
- p is the pitch of threads.

COPY COMPLIANT to the original document resident on the computer system at the time of printing

Ensure the washer load does not exceed the material's yield strength limit. If this value is surpassed, select a material with a higher yield strength.

$$\frac{W}{\frac{\pi}{4} \cdot (s^2 - D^2) \cdot \sigma_{yield,washer}} \leq 100\%$$

Where:

- s is the diameter of the nut (Figure 4: Weighted average radius.*Figure 4*).
- D is the diameter of the hole within which the screw engages in the bolted connection. In general, it is the washer internal diameter (Figure 4: Weighted average radius.*Figure 4*).

6. References

API 686 – Recommended Practice for Machinery Installation and Installation Design. 2nd Edition, December 2009.

IS0 261:1998 – General purpose metric screw threads – General plan

ISO 7089 – Plain washer – Normal Series – Product grade A

ISO 4032 UNI 5588 DIN 934 – Hexagon regular nuts – Product grades A and B

Juvinall, Robert C., and Kurt M. Marshek. Fundamentals of machine component design. John Wiley & Sons.

Rapisarda, G. "Le coppie di serraggio per la bulloneria normalizzata".

Ghidoni, P. "Theorical-experimental investigation of the torque-preload relationship on connection elements for bodies under pressure." Politecnico di Milano, 2019.

Delta Sigma. "Operators manual", 2020. (Ultrasound sensor manual)

***Mod.497** – Tightening torque*

COPY COMPLIANT to the original document resident on the computer system at the time of printing

7. Appendix A. Case study

7.1. Case study: job T70994.008-20485

Test conditions. Test was performed on a BB3 pump as show in *Figure 5.*

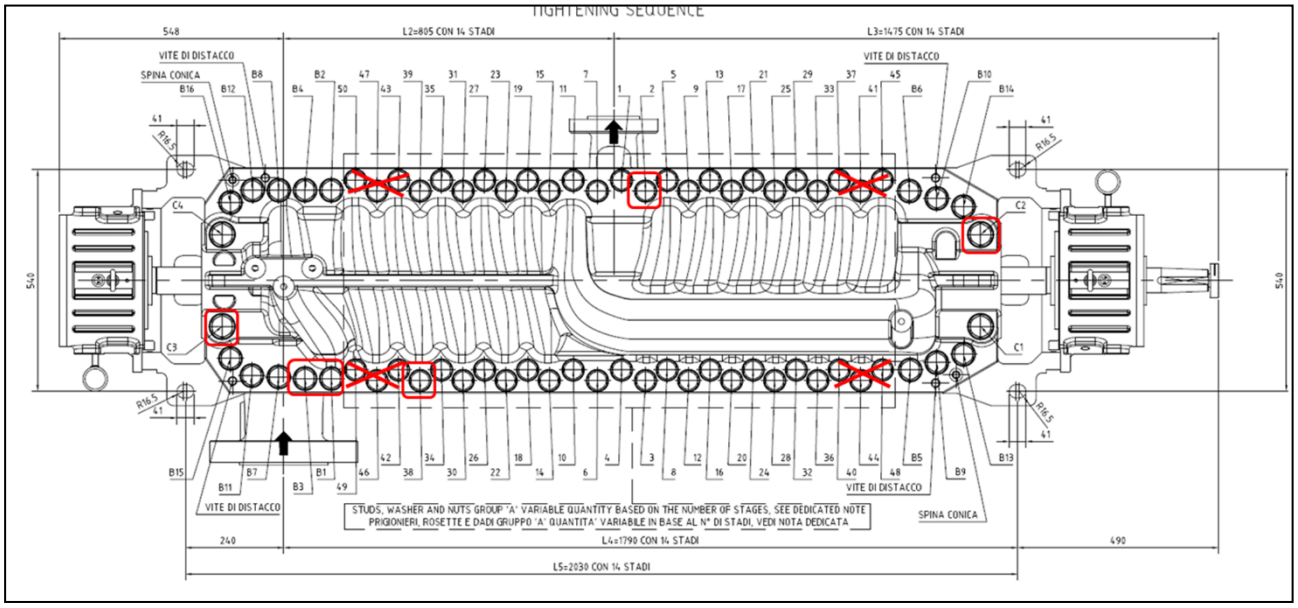

Figure 5: Assembly drawing.

The pump had 3 different sizes of bolts (*Figure 5*):

- M39/M36 (# 38), studs 1 to 38 (group A).
- M42/M39 (# 16), studs B1 to B16.
- M48/M45 (# 4), studs C1 to C4.

The materials used were mainly carbon steel except for the washer in austenitic stainless steel.

- A216 Gr. WCB for casings.
- A193 Gr. B7 for studs.
- A194 2H for cap nuts.
- A276 Tp. 316L for washers.

Elongation was measured for the bolts circled in *Figure 5*.

- Studs 2 and 38 for group A.
- Studs B1 and B3.
- Studs C2 and C3.

Those with an X were not present for the reduced number of stages (11).

COPY COMPLIANT to the original document resident on the computer system at the time of printing

Figure 6 and *Figure 7* are an example of the studs and the cap nuts used for the tightening.

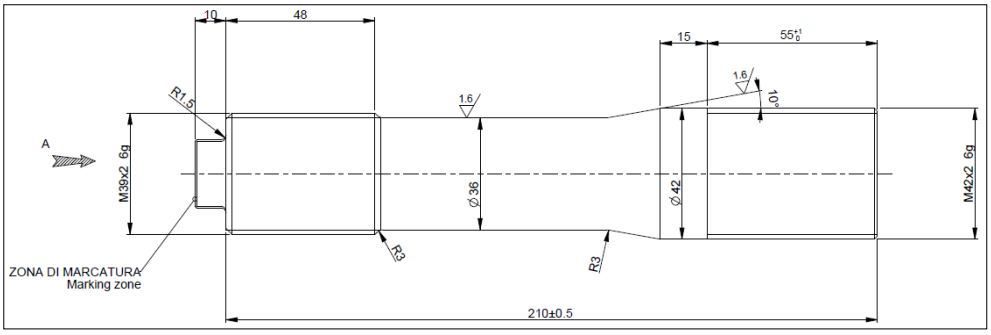

Figure 6: Example of stud.

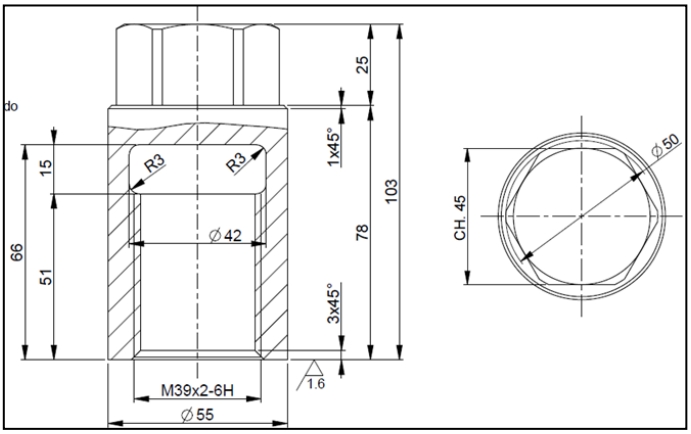

Figure 7: Example of cap nut.

COPY COMPLIANT to the original document resident on the computer system at the time of printing

Measurements were performed with an ultrasound device. It measures the elongation of the stud when applying a torque. Knowing the stud stiffness, the axial load can be evaluated as the product of the bolt stiffness and the measured elongation. MOLYKOTE anti-seize lubricant was applied on the threads and between contact planes to reduce the friction.

A hole was done in the cap nut to insert the ultrasound sensor and the squared key at the stud head was flattened to allow the measurement (*Figure 8*).

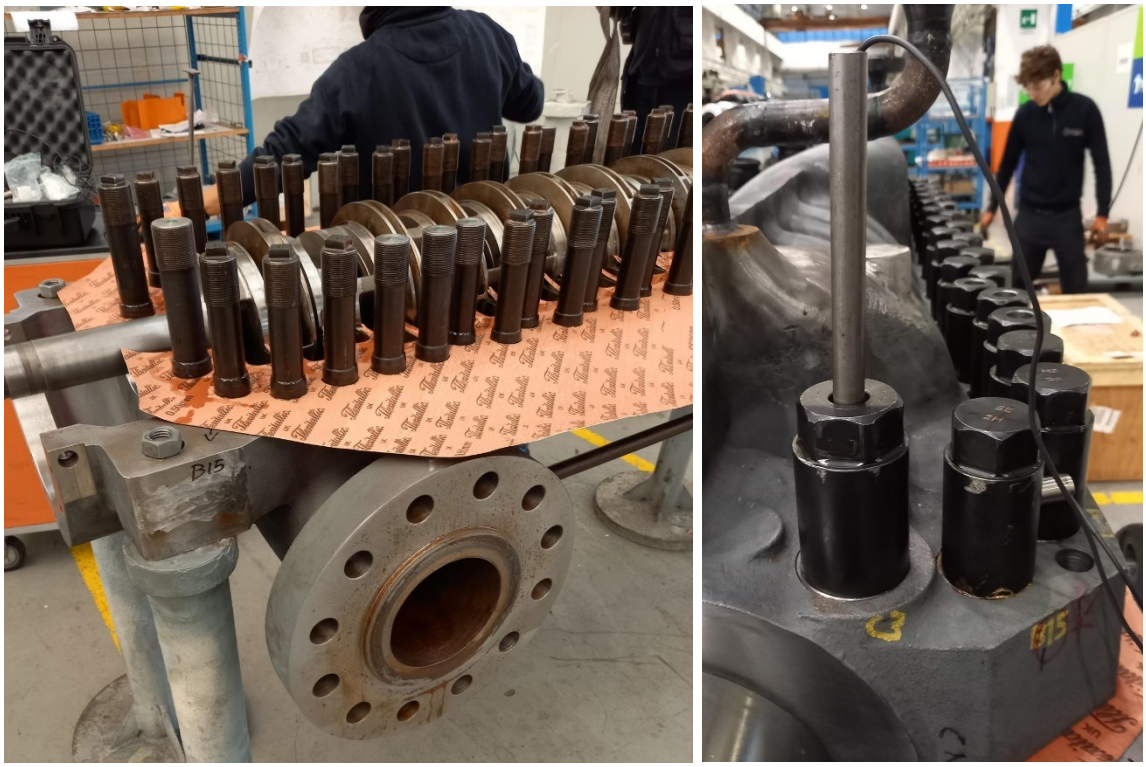

Figure 8: Measurement configuration.

The tightening torque applied was defined considering a **friction coefficient** of 0.14 between threads and planes and a percentage of tightening relative to the material yield strength and equal to:

- 70% for group A.
- 65% for group B.
- 65% for group C.

COPY COMPLIANT to the original document resident on the computer system at the time of printing

Table 2 summarizes the **theorical preload** that should be applied on each group of studs and the force to reach the yield strength limit.

Table 2: Tightening force.

	Group A [kN]	Group B [kN]	Group C [kN]
Tightening Force	435	480	650
Limit Yield Force	620	740	1000

With the previous assumption, the resulting **tightening torques** applied on each group are summarized in *Table 3*. The torque was applied on all the bolts in 4 steps.

Table 3: Tightening torque.

Tightening Torque [%]	**Group A [Nm]**	**Group B [Nm]**	**Group C [Nm]**
25	682	842	1358
50	1358	1613	2535
75	2034	2429	*3896**
100	2735	*3246**	*4978**

** torque given with bigger pneumatic wrenches*

Bolt stiffness was evaluated with a static analysis in which the stud geometry was modelled, and a test load was applied at one end. In the threaded sections, a length equal to $d_n/2$ and a diameter equal to the resistant diameter (d_m) was considered on each side (*Figure 9*). The elastic modulus considered for ASTM A197 Gr. B7 is 204000 MPa.

Figure 9: Bolt numerical model.

COPY COMPLIANT to the original document resident on the computer system at the time of printing

The stiffness for each group was:

- 1.37E+06 N/mm for group A.
- 1.53E+06 N/mm for group B.
- 1.73E+06 N/mm for group C.

Then the elongations that give the desired preload were:

- 0.318 mm for group A.
- 0.314 mm for group B.
- 0.376 mm for group C.

Test Results. *Table 4*, *Table 5* and *Table 6* summarize the measured elongations for each group of bolts at different steps of tightening.

Table 4: Elongation group A.

	Stud A2			**Stud A38**	
Tightening torque [%]	**Measure 1 [mm]**	**Measure 2 [mm]**	**Measure 3 [mm]**	**Measure 1 [mm]**	**Measure 2 [mm]**
25		0.103			0.005
50	0.215	0.182	0.368	0.162	0.079
75		0.299			0.129
100	0.675	0.803	0.518	0.326	0.280

Table 5: Elongation group B.

	Stud B1		**Stud B3**	
Tightening torque [%]	**Measure 1 [mm]**	**Measure 2 [mm]**	**Measure 1 [mm]**	**Measure 2 [mm]**
25		0.076		0.037
50	0.157	0.155	0.124	0.124
75		0.251		0.264
100	0.327	0.359	0.519	0.348

COPY COMPLIANT to the original document resident on the computer system at the time of printing

Table 6: Elongation group C.

	Stud C2		Stud C3
Tightening torque [%]	**Measure 1 [mm]**	**Measure 2 [mm]**	**Measure 2 [mm]**
25		0.074	0.056
50		-0.019	0.183
75		0.354	0.114
100	0.284	0.273	0.553

Table 7, *Table 8* and *Table 9* summarize the estimated preload on each group of bolts. Preload was estimated by multiplying the measured elongation for the estimated stiffness.

Table 7: Estimated preload group A.

	Stud A2			Stud A38	
Tightening torque [%]	**Measure 1 [kN]**	**Measure 2 [kN]**	**Measure 3 [kN]**	**Measure 1 [kN]**	**Measure 2 [kN]**
25		141.0			6.8
50	294.4	249.2	503.9	221.8	108.2
75		409.4			176.6
100	924.3	1099.5	709.3	446.4	383.4

COPY COMPLIANT to the original document resident on the computer system at the time of printing

Table 8: Estimated preload group B.

	Stud B1		Stud B3	
Tightening torque [%]	**Measure 1 [kN]**	**Measure 2 [kN]**	**Measure 1 [kN]**	**Measure 2 [kN]**
25		116.12		56.53
50	239.87	236.82	189.45	189.45
75		383.49		403.35
100	499.61	548.50	792.95	531.69

Table 9: Estimated preload group C.

	Stud C2		Stud C3
Tightening torque [%]	**Measure 1 [kN]**	**Measure 2 [kN]**	**Measure 2 [kN]**
25		127.77	96.69
50		-32.81	315.97
75		611.22	196.84
100	490.36	471.37	954.82

Finally, the friction coefficient (*Table 10*, *Table 11* and *Table 12*) was evaluated assuming a friction coefficient equal for threads and planes with the following equation:

$$f = \frac{\frac{T}{W} - 0.16 \cdot p}{\left(0.578 \cdot d_m + R_P\right)}$$

COPY COMPLIANT to the original document resident on the computer system at the time of printing

Table 10: Estimated friction coefficient group A.

	Stud A2			Stud A38	
Tightening torque [%]	**Measure 1 [-]**	**Measure 2 [-]**	**Measure 3 [-]**	**Measure 1 [-]**	**Measure 2 [-]**
25		0.105			2.320
50	0.100	0.120	0.055	0.136	0.286
75		0.109			0.262
100	0.062	0.051	0.083	0.136	0.159

Table 11: Estimated friction coefficient group B.

	Stud B1		Stud B3	
Tightening torque [%]	**Measure 1 [-]**	**Measure 2 [-]**	**Measure 1 [-]**	**Measure 2 [-]**
25		0.151		0.318
50	0.140	0.142	0.179	0.179
75		0.131		0.125
100	0.135	0.122	0.082	0.126

Table 12: Estimated friction coefficient group C.

	Stud C2		Stud C3
Tightening torque [%]	**Measure 1 [-]**	**Measure 2 [-]**	**Measure 2 [-]**
25		0.197	0.263
50		-1.485	0.147
75		0.116	0.373
100	0.188	0.196	0.094

COPY COMPLIANT to the original document resident on the computer system at the time of printing

Conclusions. In group A, the desired elongation (0.318 mm) and the theorical preload (435 kN) resulted in good agreement with stud A38, while, for stud A2, elongation and preload resulted in higher values. There are two possible causes for this disagreement: the yield strength limit of the material was reached, or the measurement was not done properly.

Measures 1 and 2 of stud A2, the resulting values showed consistency with the ones estimated until the application of 50% of the tightening torque. Then, elongation and preload presented considerable higher values, possibly due to the yield strength limit being reached.

For stud A38 the friction coefficient resulted between 0.14 and 0.16.

Group B is the one with the more consistent results in terms of elongation and preload because, except for the final values of measure 1 on stud B3, they were repeatable in the different measurements and similar between the bolts. The difference in the final measure of bolt B3 is probably related to an error in the measurement.

Group C presents not consistent values because elongation and preload decreased when the tightening torque increased. These results suggest that the measurements were not correct. This case cannot be taken as reference to estimate the friction coefficient.

In conclusion, the measurements required a preliminary work to create a hole in the cap nut and to flatten the head stud. The hole was too small to correctly position the sensor and lubricate it, while the stud head probably was not flattened properly. All these aspects made the measurement difficult with a high chance of making some errors. However, some results were obtained.

COPY COMPLIANT to the original document resident on the computer system at the time of printing

7.2. Case study: job P30691.002-20406

Test conditions. Test was performed on a BB1 pump as shown in *Figure 10*.

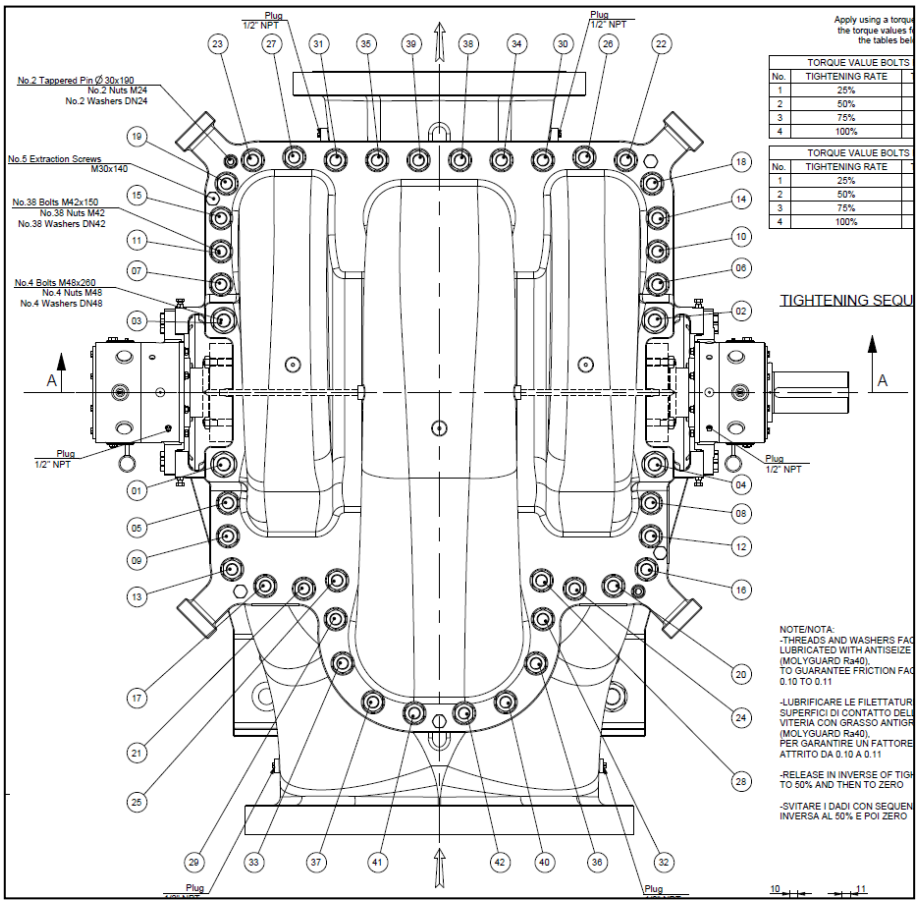

Figure 10: Assembly drawing.

The pump had 2 sizes of bolts (*Figure 10*):

- M48 (# 4), studs 01 to 04.
- M42 (# 38), studs 05 to 42.

The materials used were super duplex stainless steel:

- A890 Gr. 6A for the casing.
- A276 UNS S32760 for bolts.
- UNS S32760 for nuts.
- UNS S32760 for washers.

Elongation was measured on the bolts at the end of the tightening procedure.

COPY COMPLIANT to the original document resident on the computer system at the time of printing

Table 13, *Table 14*, *Table 15* give the general dimensions of bolts, nuts and washers used in the system.

Table 13: Bolts dimensions.

	M48	**M42**
Nominal diameter [mm]	48	42
Total length [mm]	260	150
Pitch [mm]	5	4.5

Table 14: Nuts dimensions.

	M48	**M42**
External diameter [mm]	75	65
Thickness [mm]	38	34

Table 15: Washers dimensions.

	M48	**M42**
Internal diameter [mm]	50	43
External diameter [mm]	92	78
Thickness [mm]	8	7

COPY COMPLIANT to the original document resident on the computer system at the time of printing

Elongation measurements were performed with an ultrasound device and preload was evaluated by an estimation of bolt stiffness. Sensors were placed at the head of the bolt. Lubricant “Molyguard Ra/40” was applied on the threads and between contact planes to reduce friction.

The tightening torque applied was defined considering a **friction coefficient** of 0.16 between the threads and planes and a percentage of tightening relative to the material yield strength equal to:

- 70% for M48.
- 70% for M42.

Table 16 summarizes the **theorical preload** that should be applied on each group of studs and the force to reach the yield strength limit.

Table 16: Tightening force.

	M48 [kN]	**M42 [kN]**
Tightening Force	565	430
Limit Yield Force	810	615

The **tightening torques** applied on each group are summarized in *Table 17*. The torque was applied on all bolts in 4 steps.

Table 17: Tightening torque.

Tightening Torque [%]	**M48 [Nm]**	**M42 [Nm]**
25	1407	975
50	2815	1950
75	4221	2925
100	5630	3900

COPY COMPLIANT to the original document resident on the computer system at the time of printing

Bolt stiffness was evaluated as:

$$k = \frac{EA_r}{L} [N/mm]$$

Where:

- E is the Young's module equal to 200000 MPa.
- A_r is the resistant section of 1470 mm² for M48 and 1120 mm² for M42.
- L is the effective length of 259 mm for M48 and 132 mm for M42.

The obtained stiffnesses were:

- 1.14E+06 N/mm for M48.
- 1.70E+06 N/mm for M42.

Then, the expected elongations were:

- 0.499 mm for M48.
- 0.254 mm for M42.

Test Results. *Table 18* and *Table 19* report the measured elongation, the estimated load and the resulting friction coefficient for each bolt group.

Table 18: M48 bolts results.

	M48		
# Bolt	**Elongation [mm]**	**Preload [kN]**	**Friction coefficient [-]**
01	0.37	421	0.220
02	0.36	410	0.227
03	0.41	466	0.197
04	0.35	398	0.234

COPY COMPLIANT to the original document resident on the computer system at the time of printing

Table 19: M42 bolts results.

	M42		
# Bolt	**Elongation [mm]**	**Preload [kN]**	**Friction coefficient [-]**
34	0.207	352	0.210
35	0.166	282	0.266
38	0.154	262	0.287
39	0.214	363	0.203

Conclusions. On M48 bolts, the desired elongation (0.499 mm) and the theorical preload (565 kN) were not reached with the estimated tightening torque. *(The origin of these values is not clear)*

For these bolts, the friction coefficient resulted between 0.20 and 0.23.

On M42 group, #34 and #39 presented similar values between each other; #35 and #38 presented slightly lower values, corresponding to a greater friction coefficient. However, values were still below the ones estimated.

In this case the friction coefficient went from 0.20 to 0.29.

COPY COMPLIANT to the original document resident on the computer system at the time of printing

7.3. Case study: job P30691.005-20409

Test conditions. Test was performed on a BB1 pump as shown in *Figure 11*.

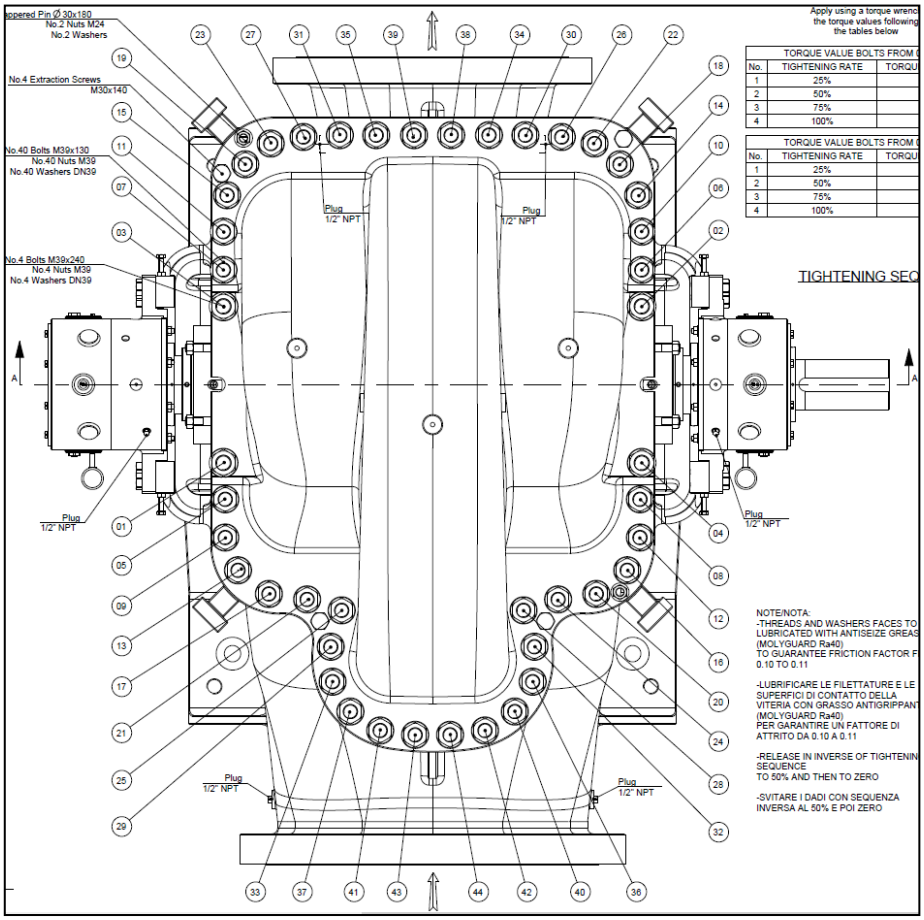

Figure 11: Assembly drawing.

The pump had 2 sizes of bolts (*Figure 11*):

- M42 (# 4), studs 01 to 04.
- M39 (# 40), studs 05 to 44.

The materials used were super duplex stainless steel.

- A890 Gr. 6A for the casing.
- A276 UNS S32760 for bolts.
- A276 UNS S32760 for nuts.
- UNS S32760 for washers.

Elongation was measured on bolts at the end of the tightening procedure.

COPY COMPLIANT to the original document resident on the computer system at the time of printing

Table 20, *Table 21* and *Table 22* give the general dimensions of bolts, nuts and washers used in the system.

Table 20: Bolts dimensions.

	M42	**M39**
Nominal diameter [mm]	42	39
Total length [mm]	245	150
Pitch [mm]	4.5	4

Table 21: Nuts dimensions.

	M42	**M39**
External diameter [mm]	65	60
Thickness [mm]	34	31

Table 22: Washers dimensions.

	M42	**M39**
Internal diameter [mm]	43	40
External diameter [mm]	78	72
Thickness [mm]	7	6

COPY COMPLIANT to the original document resident on the computer system at the time of printing

Elongation measurements were performed with an ultrasound device and preload was evaluated by an estimation of bolt stiffness. Sensors were placed at the head of the bolt. Lubricant was applied on the threads and between contact planes to reduce the friction.

The tightening torque applied was defined considering a **friction coefficient** of 0.14 between the threads and planes and a percentage of tightening relative to the material yield strength and equal to:

- 70% for M42.
- 70% for M39.

Table 23 summarizes the **theorical preload** that should be applied on each group of studs and the force to reach the yield strength limit.

Table 23: Tightening force.

	M42 [kN]	**M39 [kN]**
Tightening Force	430	375
Limit Yield Force	615	535

The initial **tightening torques** applied on each group are summarized in *Table 24*. The torque was applied on all bolts in 4 steps.

Table 24: Tightening torque.

Tightening Torque [%]	**M42 [Nm]**	**M39 [Nm]**
25	875	675
50	1750	1350
75	2625	2025
100	3500	2700

COPY COMPLIANT to the original document resident on the computer system at the time of printing

Bolt stiffness was evaluated as:

$$k = \frac{EA_r}{L} [N/mm]$$

Where:

- E is the Young's module equal to 200000 MPa.
- A_r is the resistant section defined as the area of the bolt material, which experiences the applied tensile stress. For M42 bolts it is equal to 1120 mm^2 and equal to 976 mm^2 for M39.
- L is the effective length of 248 mm for M42 and 129 mm for M39.

The obtained stiffnesses were:

- 9.04E+05 N/mm for M42.
- 1.51E+06 N/mm for M39.

Then, the expected elongations were:

- 0.477 mm for M42.
- 0.248 mm for M39.

Test Results. Measurements were performed on two equal machines and applying two different lubricants. On P30691.05.03, the lubricant used was "Molyguard Ra/40", while on P30691.05.04, the lubricant used was "Permatex".

- **P30691.05.03.** A series of tests were carried out in different days increasing the tightening torque.

Table 25 summarizes the measured elongation, the estimated load and the resulting friction coefficient for M42 bolts applying the initial torque of 3500 Nm.

Table 25: M42 bolts results (23/6/21).

	M42		
# Bolt	**Elongation [mm]**	**Preload [kN]**	**Friction coefficient [-]**
01	0.127	115	0.600
02	0.208	188	0.361
03	0.219	198	0.342
04	0.193	174	0.390

COPY COMPLIANT to the original document resident on the computer system at the time of printing

Table 26 reports the measured elongation, the estimated load and the resulting friction coefficient for M42 bolts, applying a torque of 3600 Nm on bolt #01 and #04 and a torque of 3400 Nm on bolt #02 and #03.

Table 26: M42 bolts results (24/6/21).

	M42		
# Bolt	**Elongation [mm]**	**Preload [kN]**	**Friction coefficient [-]**
01	0.167	151	0.466
02	0.217	196	0.335
03	0.221	200	0.329
04	0.247	223	0.311

Table 27 reports the measured elongation, the estimated load and the resulting friction coefficient for M42 bolts applying a torque of 3500 Nm.

Table 27: M42 bolts results (28/6/21).

	M42		
# Bolt	**Elongation [mm]**	**Preload [kN]**	**Friction coefficient [-]**
01	0.216	195	0.347
02	0.263	238	0.282
03	0.282	255	0.262
04	0.279	252	0.265

COPY COMPLIANT to the original document resident on the computer system at the time of printing

Table 28 shows the measured elongation, the estimated load and the resulting friction coefficient for M42 bolts applying a torque of 5200 Nm.

Table 28: M42 bolts results (29/6/21).

	M42		
# Bolt	**Elongation [mm]**	**Preload [kN]**	**Friction coefficient [-]**
01	0.256	231	0.439
02	0.297	268	0.376
03	0.300	271	0.372
04	0.317	287	0.351

Table 29 reports the measured elongation, the estimated load and the resulting friction coefficient for M39 bolts applying a torque of 2700 Nm.

Table 29: M39 bolts results (23/6/21).

	M39		
# Bolt	**Elongation [mm]**	**Preload [kN]**	**Friction coefficient [-]**
05	0.088	133	0.394
06	0.117	177	0.293
07	0.096	145	0.360
08	0.106	160	0.325
09	0.099	150	0.349
10	0.088	133	0.394
11	0.097	147	0.357
12	0.091	138	0.381
13	0.102	154	0.338
14	0.078	118	0.447
15	0.082	124	0.424

COPY COMPLIANT to the original document resident on the computer system at the time of printing

16	0.095	144	0.364
17	0.096	145	0.360
18	0.097	147	0.357
19	0.102	154	0.338
20	0.09	136	0.385
21	0.115	174	0.298
22	0.112	169	0.307
23	0.061	92	0.576
24	0.11	166	0.313
25	0.091	138	0.381
26	0.112	169	0.307
27	0.111	168	0.310
28	0.111	168	0.310
29	0.085	129	0.409
30	0.101	153	0.342
31	0.11	166	0.313
32	0.109	165	0.316
33	0.074	112	0.472
34	0.107	162	0.322
35	0.105	159	0.328
36	0.083	126	0.419
37	0.092	139	0.377
38	0.095	144	0.364
39	0.081	123	0.430
40	0.084	127	0.414
41	0.092	139	0.377

COPY COMPLIANT to the original document resident on the computer system at the time of printing

42	0.094	142	0.368
43	0.091	138	0.381
44	0.105	159	0.328

Table 30 reports the measured elongation, the estimated load and the resulting friction coefficient for M39 bolts applying a torque of 3000 Nm.

Table 30: M39 bolts results (24/6/21).

	M39		
# Bolt	**Elongation [mm]**	**Preload [kN]**	**Friction coefficient [-]**
05	0.131	198	0.291
06	0.112	169	0.343
07	0.118	179	0.324
08	0.143	216	0.265
09	0.150	227	0.252
10	0.112	169	0.343
11	0.130	197	0.293
12	0.121	183	0.316
13	0.120	182	0.319
14	0.124	188	0.308
15	0.126	191	0.303
16	0.120	182	0.319
17	0.145	219	0.261

COPY COMPLIANT to the original document resident on the computer system at the time of printing

Table 31 reports the measured elongation, the estimated load and the resulting friction coefficient for M39 bolts applying a torque of 3500 Nm.

Table 31: M39 bolts results (28/6/21).

	M39		
# Bolt	**Elongation [mm]**	**Preload [kN]**	**Friction coefficient [-]**
05	0.126	191	0.356
06	0.116	175	0.388
07	0.078	118	0.584
08	0.179	271	0.246
09	0.151	228	0.294
11	0.147	222	0.303
12	0.127	192	0.353
13	0.125	189	0.359
14	0.128	194	0.350
15	0.107	162	0.422
16	0.143	216	0.312
17	0.139	210	0.321
18	0.160	242	0.277
19	0.142	215	0.314
20	0.151	228	0.294
21	0.164	248	0.270
22	0.165	250	0.268
23	0.113	171	0.398
24	0.160	242	0.277
25	0.130	197	0.344
26	0.153	231	0.290

COPY COMPLIANT to the original document resident on the computer system at the time of printing

27	0.147	222	0.303
28	0.122	185	0.368
29	0.126	191	0.356
30	0.134	203	0.334
31	0.144	218	0.309
32	0.130	197	0.344
33	0.112	169	0.402
34	0.145	219	0.307
35	0.132	200	0.339
36	0.129	195	0.347
37	0.129	195	0.347
38	0.145	219	0.307
39	0.125	189	0.359
40	0.138	209	0.324
41	0.133	201	0.336
42	0.134	203	0.334
43	0.131	198	0.342
44	0.141	213	0.316

COPY COMPLIANT to the original document resident on the computer system at the time of printing

Table 32 shows the measured elongation, the estimated load and the resulting friction coefficient for M39 bolts applying a torque of 3800 Nm.

Table 32: M39 bolts results (29/6/21).

	M39		
# Bolt	**Elongation [mm]**	**Preload [kN]**	**Friction coefficient [-]**
05	0.140	212	0.347
06	0.113	171	0.434
07	0.090	136	0.548
08	0.169	256	0.285
09	0.141	213	0.345
10	0.107	162	0.459
11	0.167	253	0.289
12	0.145	219	0.335
13	0.135	204	0.361
14	0.121	183	0.404
15	0.119	180	0.411
16	0.150	227	0.323
17	0.154	233	0.314
18	0.151	228	0.321
19	0.156	236	0.310
20	0.155	234	0.312
21	0.172	260	0.280
22	0.176	266	0.273
23	0.117	177	0.418
24	0.159	241	0.304
25	0.129	195	0.378

COPY COMPLIANT to the original document resident on the computer system at the time of printing

26	0.167	253	0.289
27	0.169	256	0.285
28	0.135	204	0.361
29	0.129	195	0.378
30	0.135	204	0.361
31	0.150	227	0.323
32	0.134	203	0.364
33	0.110	166	0.446
34	0.139	210	0.350
35	0.141	213	0.345
36	0.133	201	0.366
37	0.139	210	0.350
38	0.155	234	0.312
39	0.130	197	0.375
40	0.134	203	0.364
41	0.142	215	0.342
42	0.131	198	0.372
43	0.130	197	0.375
44	0.142	215	0.342

COPY COMPLIANT to the original document resident on the computer system at the time of printing

- **P30691.05.04**

Table 33 reports the measured elongation, the estimated load and the resulting friction coefficient for M42 bolts applying a torque of 5800 Nm.

Table 33: M42 bolts results (15/7/21).

	M42		
# Bolt	**Elongation [mm]**	**Preload [kN]**	**Friction coefficient [-]**
01	0.344	311	0.362
02	0.342	309	0.364
03	0.346	313	0.359
04	0.360	325	0.345

Table 34 report the measured elongation, the estimated load and the resulting friction coefficient for M39 bolts applying a torque of 4000 Nm. The bolt highlighted in red presented a preload higher than the yield force limit (535 kN).

Table 34: M39 bolts results (15/7/21).

	M39		
# Bolt	**Elongation [mm]**	**Preload [kN]**	**Friction coefficient [-]**
05	0.149	225	0.343
06	0.145	219	0.353
07	0.148	224	0.346
08	0.244	369	0.204
09	0.204	309	0.247
10	0.149	225	0.343
11	0.231	349	0.216
12	0.197	298	0.256
13	0.187	283	0.271
14	0.173	262	0.294

COPY COMPLIANT to the original document resident on the computer system at the time of printing

15	0.175	265	0.290
16	0.215	325	0.233
17	0.186	281	0.272
18	0.203	307	0.248
19	0.172	260	0.295
20	0.244	369	0.204
21	0.238	360	0.210
22	0.146	221	0.351
23	0.158	239	0.323
24	0.387	585	0.123
25	0.263	398	0.188
26	0.192	290	0.263
27	0.199	301	0.253
28	0.325	492	0.150
29	0.190	287	0.266
30	0.183	277	0.277
31	0.194	293	0.260
32	0.169	256	0.301
33	0.212	321	0.237
34	0.207	313	0.243
35	0.149	225	0.343
36	0.186	281	0.272
37	0.158	239	0.323
38	0.137	207	0.375
39	0.157	238	0.325
40	0.202	306	0.249

COPY COMPLIANT to the original document resident on the computer system at the time of printing

41	0.169	256	0.301
42	0.191	289	0.265
43	0.256	387	0.194
44	0.201	304	0.251

Conclusions. Measurements were performed on two machines. A series of tests with increasing tightening torque were carried out.

Regarding M42 bolts, the desired elongation (0.477 mm) and the theoretical preload (430 kN) were not reached even with a tightening torque of 5800 Nm. The mean value of the friction coefficient was 0.34 with a standard deviation of 0.04 if excluding the extreme values.

For M39 bolts, the desired elongation (0.248 mm) and the theorical preload (375 kN) were reached, in some cases, with a tightening torque of 4000 Nm. In this tightening condition, the friction coefficient resulted more variable compared to the previous tests. The mean friction coefficient, excluding the last measurement, was equal to 0.35 with a standard deviation of 0.06.

COPY COMPLIANT to the original document resident on the computer system at the time of printing

7.4. Experimental campaign

Test condition. A specific setup was designed for the experimental campaign. The sizing of test plates was defined according to the Technical Standards for Construction (NTC 2018):

- $e1 \geq 1.2 \cdot d0$
- $e2 \geq 1.2 \cdot d0$
- $h \cong 1.5 \cdot L_{shank}$

Where:

- $d0$ is the hole diameter.
- L_{shank} is the metal end length.

Given that the test plate dimensions remained insufficient, it has been enlarged by a factor of approximately 1.25 when deemed appropriate.

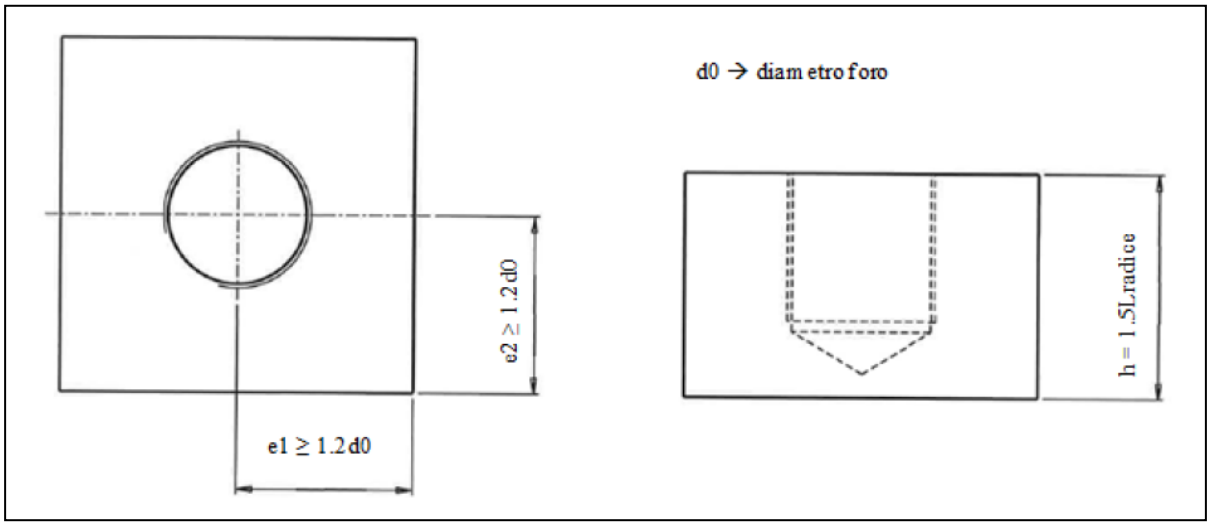

Figure 12: Test plate dimension.

The test campaign was developed evaluating 3 M52 studs in A193 B7 (*Table 35*).

Table 35: Stud length.

	Metal End Length [mm]	Nut End Length [mm]	Overall Length [mm]
M52x3	52	124	160

COPY COMPLIANT to the original document resident on the computer system at the time of printing

The materials for the other components were:

- S235 for test plates (carbon steel).
- 316 for washer (austenitic stainless steel B8M).
- N/A for the nut.

Measurements were performed with strain gauges. A full Wheatstone bridge was adopted to evaluate the contribution of the applied traction, while the quarter bridge was used to evaluate the bending contribution. The chosen strain gauges were of two types: an uniaxial strain gauge was used for the quarter-bridge configuration, while two biaxial strain gauges were used for the full bridge configuration.

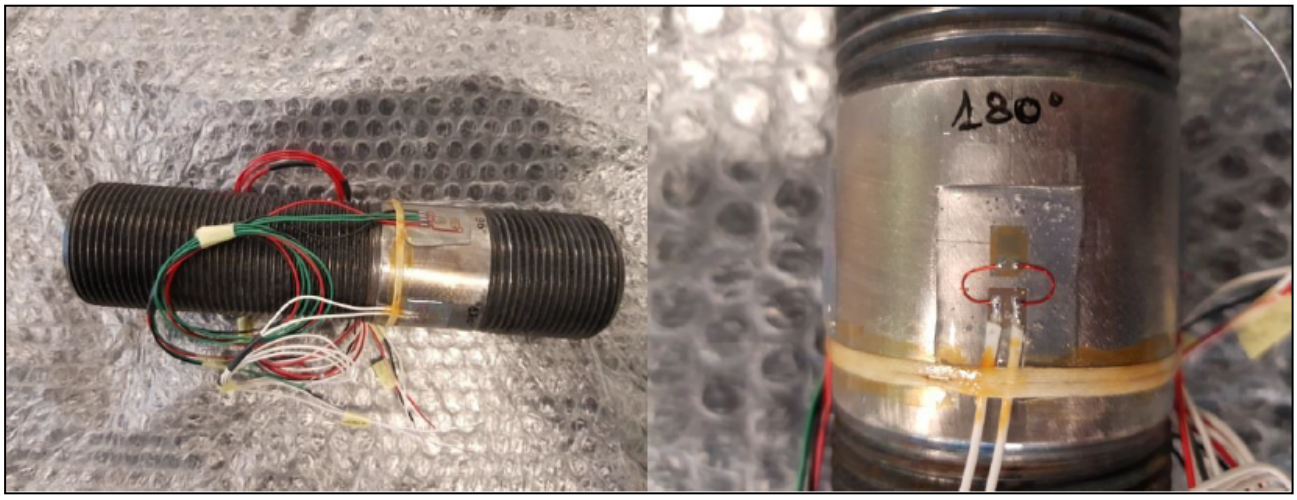

Figure 13: Example of a stud with strain gauges and close-up of the quarter-bridge configuration.

It was decided to evaluate the case of 3 M52 studs in A193 B7 without particular coverings, estimating the deformation thanks to strain gauges with a full bridge configuration and with a quarter-bridge configuration.

The experimental tests consist of a series of deformation measurements obtained by varying the tightening torque, evaluated in different conditions (lubricated/non-lubricated, with/without washer), to estimate the effect on the preload. The lubricant used was Chesterton 783 ACR; it was applied on the stud threads, nut surface in contact with the plane and both faces of the washer.

COPY COMPLIANT to the original document resident on the computer system at the time of printing

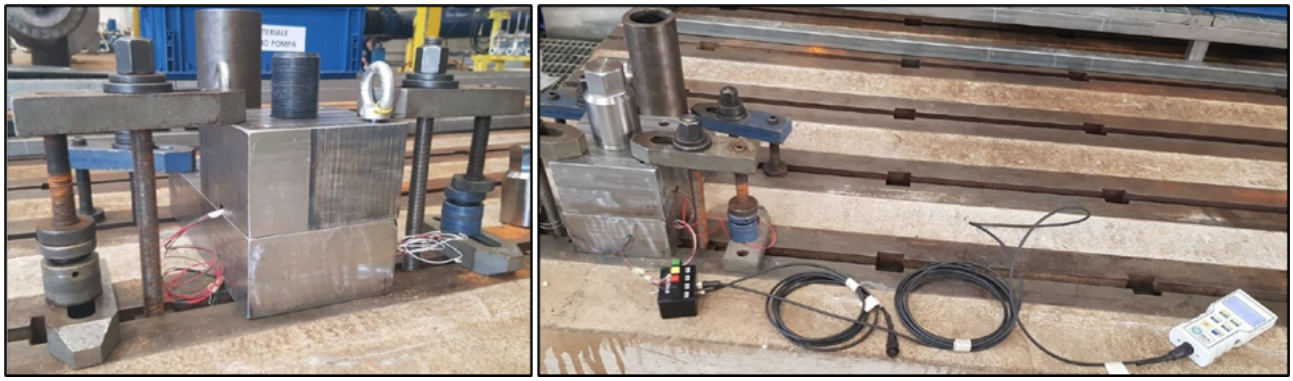

Figure 14: Test setup and complete measurement circuit.

A series of tests using the full-bridge and quarter-bridge circuit were performed and no substantial difference between the two was observed. Consequently, the contribution of the bending was negligible. The results presented below refer to the full-bridge configuration.

Initially, the theoretical preload was calculated starting from the tightening torque and considering a different friction coefficient for the various configurations. A friction coefficient equal to 0.16 for the lubricated configuration and 0.11 for the non-lubricated configuration.

Table 36: Theoretical preload with and without lubrication.

	Theoretical lubricated	Theoretical non-lubricated
Torque [Nm]	Preload [kN]	Preload [kN]
1466	132.6	189.2
1759	159.1	227.0
2052	185.6	264.8
2360	213.4	304.6
2655	240.1	342.6
2803	253.5	361.7
2950	266.8	380.7

The offset of the instrument reported during test was subtracted from the measured deformation. The resulting value was multiplied by E (equal to 212000 MPa) to obtain the stress and then, by multiplying it by the section of the stud (2083 mm^2), the preload corresponding to the measured deformation was obtained.

COPY COMPLIANT to the original document resident on the computer system at the time of printing

Test results. In the following tables, preloads in the different configurations are shown.

- *Non-lubricated setup, without washer.*

Table 37: Preload in the condition of non-lubricated setup and without washer.

Torque [Nm]	Preload Test A [kN]	Preload Test B [kN]	Preload Test C [kN]	Preload Test D [kN]
1466	134.7	154.1	135.1	157.7
1759	173.6	180.2	168.7	184.2
2052	212.0	228.8	198.7	215.1
2360	244.2	261.0	234.5	238.9
2655	280.9	298.5	265.9	261.9
2803	293.7	330.3	270.3	287.0
2950	312.7	358.6	301.6	311.8

- *Non-lubricated setup, with washer.*

Table 38: Preload in the condition of non-lubricated setup and with washer.

Torque [Nm]	Preload Test A [kN]	Preload Test B [kN]	Preload Test C [kN]	Preload Test D [kN]
1466	151.0	110.8	94.9	90.5
1759	176.2	156.3	122.8	121.0
2052	207.1	192.1	152.8	142.2
2360	237.6	245.1	178.4	156.8
2655	270.7	292.3	203.1	197.0
2803	284.8	312.2	227.4	207.6
2950	303.4	341.4	229.6	234.5

- *Lubricated setup, without washer.*

Table 39: Preload in the condition of lubricated setup and without washer.

Torque [Nm]	Preload Test A [kN]	Preload Test B [kN]	Preload Test C [kN]	Preload Test D [kN]
1466	222.1	257.9	242.9	226.1
1759	261.0	328.6	277.8	307.8
2052	310.0	402.3	336.9	362.6
2360	363.4	473.8	382.0	425.7
2655	409.8	532.1	446.0	484.0
2803	442.1	585.1	463.7	522.0
2950	463.3	609.0	491.1	548.9

COPY COMPLIANT to the original document resident on the computer system at the time of printing

- *Lubricated setup, with washer.*

Table 40: Preload in the condition of lubricated setup and with washer.

Torque [Nm]	Preload Test A [kN]	Preload Test B1 [kN]	Preload Test B2 [kN]	Preload Test C1 [kN]	Preload Test C2 [kN]	Preload Test D [kN]
1466	228.8	253.5	332.1	247.7	211.1	259.7
1759	293.2	376.3	384.6	309.6	273.4	325.5
2052	346.7	430.6	460.2	372.7	293.2	400.5
2360	408.5	492.8	514.9	447.4	374.0	470.3
2655	453.5	509.2	579.4	516.7	450.0	516.7
2803	486.2	541.0	615.6	552.9	477.4	572.3
2950	527.7	578.5	640.8	606.3	525.5	591.3

Conclusions. The friction coefficient was obtained by minimizing the standard deviation of the measured data. For the different cases, the friction coefficients were:

- Non-lubricated setup, without washer →$f = 0.137$.
- Non-lubricated setup, with washer →$f = 0.163$.
- Lubricated setup, without washer →$f = 0.079$.
- Lubricated setup, with washer →$f = 0.072$.

COPY COMPLIANT to the original document resident on the computer system at the time of printing

8. Appendix B. Tightening torque tables

Table 41 to *Table 48* provide references for the tightening torques of bare shaft pump pressure bolts and generic skid bolts, depending on the bolt material. Tightening torques are given when lubricant is applied (lubricated condition) and when lubricant is not applied (dry condition).

Calculations were performed using the following standards for the dimensions of bolts, washers and nuts:

- IS0 261:1998 – General purpose metric screw threads – general plan
- ISO 7089 – Plain washer – Normal Series – Product grade A
- ISO 4032 UNI 5588 DIN 934 – Hexagon regular nuts – Product grades A and B

A preload equal to 70% of the stud yield strength limit was used to define the tightening torques.

Table 49 and *Table 50* may be used as a guide for the tightening torque of anchor bolts. They refer to API Standard 686 – Recommended Practice for Machinery Installation and Installation Design.

COPY COMPLIANT to the original document resident on the computer system at the time of printing

Table 41: Lubricated Tightening Torque – Bare Shaft Pump Pressure Bolts (metric).

Lubricated Tightening Torque - Bare Shaft Pump Pressure Bolts						
	Carbon steel	Stainless steel		Duplex stainless steel	Super Duplex stainless steel	
Material Type	A193/A193M Gr. B7 A320/A320M Gr. L7	A193/A193M Gr. B6 A453/A453M Gr. 660B	A193/A193M Gr. B8M A2-50 ISO 3506 A4-50 ISO 3506	A276 S31803 A479/A479M S31803	A276 S32760	A276 S32750
Yield strength [MPa]	724	585	207	450	550	515
friction coefficient [-]	0.1	0.15		0.2	0.2	
Bolt dimension [mm]	Torque value [Nm]					
M4	3	3	1	3	4	3
M5	5	6	2	6	7	7
M6	9	10	4	10	10	10
M8	20	25	9	25	30	30
M10	45	50	15	50	60	55
M12	75	85	30	85	100	95
M14	120	130	45	130	160	150
M16	170	200	70	200	250	230
M18	240	280	100	280	340	320
M20	340	390	140	390	480	450
M22	450	520	190	530	640	600
M24	590	670	240	670	820	770
M27	850	980	350	990	1200	1150
M30	1150	1350	470	1350	1650	1550
M33	1550	1800	640	1800	2200	2100
M36	2000	2350	830	2350	2850	2700
M39	2600	3050	1100	3050	3750	3500
M42	3250	3800	1350	3800	4650	4350
M45	4050	4700	1650	4700	5750	5400
M48	4900	5700	2000	5700	7000	6550
M52	6250	7300	2600	7300	8950	8400
M56	7800	9100	3200	9150	11150	10450
M60	9600	11250	3950	11300	13800	12950
M64	11600	13550	4800	13600	16650	15550
Warning!	For screws and studs coated with Xylan or Takecoat (PTFE, Teflon) or for those hot-dip galvanized, reduce the maximum recommended torques by 20% and do not use lubricants.					

COPY COMPLIANT to the original document resident on the computer system at the time of printing

Table 42: Lubricated Tightening Torque – Bare Shaft Pump Pressure Bolts (imperial).

Lubricated Tightening Torque - Bare Shaft Pump Pressure Bolts						
	Carbon steel	Stainless steel		Duplex stainless steel	Super Duplex stainless steel	
Material Type	A193/A193M Gr. B7 A320/A320M Gr. L7	A193/A193M Gr. B6 A453/A453M Gr. 660B	A193/A193M Gr. B8M A2-50 ISO 3506 A4-50 ISO 3506	A276 S31803 A479/A479M S31803	A276 S32760	A276 S32750
Yield strength [ksi]	105	85	30	65	80	75
friction coefficient [-]	0.1	0.15		0.2	0.2	
Bolt dimension [in]	Torque value [ft lb]					
1/4" x 20 UNC	8	9	3	9	10	10
5/16" x 18 UNC	15	20	6	15	20	20
3/8" x 16 UNC	25	30	10	30	35	35
1/2" x 13 UNC	65	75	25	70	90	80
5/8" x 11 UNC	120	140	50	140	170	160
3/4" x 10 UNC	220	250	90	250	310	290
7/8" x 9 UNC	350	400	140	400	490	460
1" x 8 UNC	520	600	210	600	740	690
1 1/8" x 8 UN	760	880	310	880	1050	1000
1 1/4" x 8 UN	1050	1200	430	1200	1500	1400
1 3/8" x 8 UN	1200	1400	500	1400	1750	1600
1 1/2" x 8 UN	1600	1850	660	1900	2300	2150
1 5/8" x 8 UN	2400	2800	1000	2850	3500	3250
1 3/4" x 8 UN	3000	3550	1250	3600	4350	4100
1 3/4" x 12 UN	3050	3650	1300	3700	4550	4250
1 7/8" x 8 UN	3700	4350	1550	4400	5400	5050
2" x 8 UN	4500	5350	1900	5400	6600	6150
2" x 12 UN	4600	5450	1950	5550	6800	6350
2 1/4" x 12 UN	6550	7800	2750	7950	9700	9100
2 1/2" x 8 UN	8850	10500	3700	10700	13050	12200
Warning!	For screws and studs coated with Xylan or Takecoat (PTFE, Teflon) or for those hot-dip galvanized, reduce the maximum recommended torques by 20% and do not use lubricants.					

COPY COMPLIANT to the original document resident on the computer system at the time of printing

Table 43: Dry Tightening Torque – Bare Shaft Pump Pressure Bolts (metric).

Dry Tightening Torque - Bare Shaft Pump Pressure Bolts						
	Carbon steel	Stainless steel		Duplex stainless steel	Super Duplex stainless steel	
Material Type	A193/A193M Gr. B7 A320/A320M Gr. L7	A193/A193M Gr. B6 A453/A453M Gr. 660B	A193/A193M Gr. B8M A2-50 ISO 3506 A4-50 ISO 3506	A276 S31803 A479/A479M S31803	A276 S32760	A276 S32750
Yield strength [MPa]	724	585	207	450	550	515
friction coefficient [-]	0.15	0.225		0.3	0.3	
Bolt dimension [mm]	Torque value [Nm]					
M4	4	4	2	4	5	5
M5	7	8	3	8	10	10
M6	15	15	5	15	20	15
M8	30	35	10	35	45	40
M10	60	70	25	70	85	80
M12	100	120	45	120	150	140
M14	160	190	70	190	240	220
M16	250	290	100	290	360	340
M18	350	400	140	410	500	460
M20	480	570	200	570	700	650
M22	650	760	270	770	940	880
M24	840	980	350	990	1200	1150
M27	1200	1450	510	1450	1750	1650
M30	1650	1950	690	1950	2400	2250
M33	2250	2650	930	2650	3250	3050
M36	2900	3400	1200	3450	4200	3900
M39	3750	4450	1550	4500	5500	5150
M42	4650	5500	1950	5550	6800	6350
M45	5800	6850	2450	6950	8450	7950
M48	7050	8300	2950	8400	10250	9600
M52	9000	10650	3750	10750	13150	12300
M56	11250	13250	4700	13400	16400	15350
M60	13900	16400	5800	16650	20300	19050
M64	16750	19750	7000	20000	24450	22900

COPY COMPLIANT to the original document resident on the computer system at the time of printing

Table 44: Dry Tightening Torque – Bare Shaft Pump Pressure Bolts (imperial).

Dry Tightening Torque - Bare Shaft Pump Pressure Bolts						
	Carbon steel	Stainless steel		Duplex stainless steel	Super Duplex stainless steel	
Material Type	A193/A193M Gr. B7 A320/A320M Gr. L7	A193/A193M Gr. B6 A453/A453M Gr. 660B	A193/A193M Gr. B8M A2-50 ISO 3506 A4-50 ISO 3506	A276 S31803 A479/A479M S31803	A276 S32760	A276 S32750
Yield strength [ksi]	105	85	30	65	80	75
friction coefficient [-]	0.15	0.225		0.3	0.3	
Bolt dimension [in]	Torque value [ft lb]					
1/4" x 20 UNC	10	15	5	15	15	15
5/16" x 18 UNC	20	25	9	25	30	30
3/8" x 16 UNC	35	45	15	45	55	50
1/2" x 13 UNC	90	100	35	100	130	120
5/8" x 11 UNC	180	210	75	210	250	240
3/4" x 10 UNC	310	370	130	370	450	420
7/8" x 9 UNC	500	590	210	590	720	680
1" x 8 UNC	750	880	310	880	1100	1000
1 1/8" x 8 UN	1100	1250	450	1300	1550	1450
1 1/4" x 8 UN	1500	1800	630	1800	2200	2050
1 3/8" x 8 UN	1750	2050	730	2050	2550	2350
1 1/2" x 8 UN	2300	2750	970	2750	3350	3150
1 5/8" x 8 UN	3500	4150	1450	4200	5150	4800
1 3/4" x 8 UN	4400	5200	1850	5300	6450	6050
1 3/4" x 12 UN	4500	5400	1900	5500	6750	6300
1 7/8" x 8 UN	5400	6450	2300	6550	8000	7500
2" x 8 UN	6600	7850	2800	8000	9750	9150
2" x 12 UN	6750	8100	2850	8250	10100	9450
2 1/4" x 12 UN	9650	11600	4100	11850	14450	13550
2 1/2" x 8 UN	13000	15550	5500	15850	19350	18150

COPY COMPLIANT to the original document resident on the computer system at the time of printing

Table 45: Lubricated Tightening Torque – Skid Generic Bolt (metric).

Lubricated Tightening Torque - Skid Generic Bolt						
	Carbon steel					Stainless Steel
Material Type	**A307 Gr. A**	**Class 4.8 UNI 3740**	**Class 5.8 UNI 3740**	**Class 8.8 UNI 3740**	**Class 10.9 UNI 3740**	**A4-70 ISO 3506**
Yield strength [MPa]	**250**	**320**	**400**	**640**	**900**	**450**
friction coefficient [-]	**0.1**					**0.15**
Bolt dimension [mm]	**Torque value [Nm]**					
M4	1	1	1	2	3	2
M5	2	2	3	5	6	5
M6	3	4	5	8	10	8
M8	7	9	10	20	25	20
M10	15	20	25	40	55	35
M12	25	30	40	65	90	65
M14	40	50	65	100	140	100
M16	60	75	95	150	220	150
M18	85	110	130	210	300	210
M20	120	150	190	300	420	300
M22	160	200	250	400	560	400
M24	200	260	320	520	730	520
M27	290	380	470	750	1050	760
M30	400	510	640	1050	1450	1050
M33	540	690	860	1400	1950	1400
M36	700	890	1100	1800	2500	1800
M39	900	1150	1450	2300	3250	2350
M42	1100	1450	1800	2850	4050	2900
M45	1400	1800	2250	3550	5000	3600
M48	1700	2150	2700	4350	6100	4400
M52	2150	2750	3450	5500	7750	5600
M56	2700	3450	4300	6900	9700	7000
M60	3300	4250	5300	8500	11950	8650
M64	4000	5150	6400	10250	14400	10400
Warning!	For screws and studs coated with Xylan or Takecoat (PTFE, Teflon) or for those hot-dip galvanized, reduce the maximum recommended torques by 20% and do not use lubricants.					

COPY COMPLIANT to the original document resident on the computer system at the time of printing

Table 46: Lubricated Tightening Torque – Skid Generic Bolt (imperial).

Lubricated Tightening Torque - Skid Generic Bolt						
	Carbon steel					Stainless Steel
Material Type	**A307 Gr. A**	**Class 4.8 UNI 3740**	**Class 5.8 UNI 3740**	**Class 8.8 UNI 3740**	**Class 10.9 UNI 3740**	**A4-70 ISO 3506**
Yield strength [ksi]	**36**	**46**	**58**	**93**	**131**	**65**
friction coefficient [-]	**0.1**					**0.15**
Bolt dimension [in]	**Torque value [ft lb]**					
1/4" x 20 UNC	3	3	4	7	10	7
5/16" x 18 UNC	5	7	9	15	20	15
3/8" x 16 UNC	9	10	15	25	35	25
1/2" x 13 UNC	20	30	35	55	80	55
5/8" x 11 UNC	45	55	70	110	160	110
3/4" x 10 UNC	75	95	120	190	270	190
7/8" x 9 UNC	120	160	190	310	440	310
1" x 8 UNC	180	230	290	460	650	460
1 1/8" x 8 UN	260	330	420	670	940	670
1 1/4" x 8 UN	360	460	580	930	1300	940
1 3/8" x 8 UN	420	540	670	1050	1500	1100
1 1/2" x 8 UN	550	710	890	1400	2000	1450
1 5/8" x 8 UN	830	1050	1350	2100	3000	2150
1 3/4" x 8 UN	1050	1350	1650	2650	3750	2700
1 3/4" x 12 UN	1050	1350	1700	2700	3800	2800
1 7/8" x 8 UN	1300	1650	2050	3300	4600	3350
2" x 8 UN	1550	2000	2500	4000	5600	4100
2" x 12 UN	1600	2050	2550	4050	5700	4200
2 1/4" x 12 UN	2250	2900	3600	5800	8150	6000
2 1/2" x 8 UN	3050	3900	4900	7850	11000	8100
Warning!	For screws and studs coated with Xylan or Takecoat (PTFE, Teflon) or for those hot-dip galvanized, reduce the maximum recommended torques by 20% and do not use lubricants.					

COPY COMPLIANT to the original document resident on the computer system at the time of printing

Table 47: Dry Tightening Torque – Skid Generic Bolt (metric).

Dry Tightening Torque - Skid Generic Bolt						
	Carbon steel					Stainless steel
Material Type	**A307 Gr. A**	**Class 4.8 UNI 3740**	**Class 5.8 UNI 3740**	**Class 8.8 UNI 3740**	**Class 10.9 UNI 3740**	**A4-70 ISO 3506**
Yield strength [MPa]	**250**	**320**	**400**	**640**	**900**	**450**
friction coefficient [-]	**0.15**					**0.225**
Bolt dimension [mm]	**Torque value [Nm]**					
M4	1	2	2	3	5	3
M5	3	3	4	6	9	7
M6	4	6	7	10	15	10
M8	10	15	15	25	35	25
M10	20	25	35	55	75	55
M12	35	45	55	90	130	95
M14	55	75	90	150	200	150
M16	85	110	140	220	310	220
M18	120	150	190	310	430	310
M20	170	210	270	430	600	440
M22	220	290	360	570	810	590
M24	290	370	460	740	1050	750
M27	420	540	670	1100	1500	1100
M30	570	730	920	1450	2050	1500
M33	770	990	1250	2000	2800	2050
M36	1000	1300	1600	2550	3600	2600
M39	1300	1650	2100	3350	4700	3400
M42	1600	2050	2600	4150	5800	4250
M45	2000	2550	3200	5150	7250	5250
M48	2450	3100	3900	6250	8750	6400
M52	3100	4000	5000	7950	11200	8200
M56	3900	4950	6200	9950	14000	10200
M60	4800	6150	7700	12300	17300	12650
M64	5800	7400	9250	14800	20800	15200

COPY COMPLIANT to the original document resident on the computer system at the time of printing

Table 48: Dry Tightening Torque – Skid Generic Bolt (imperial).

Dry Tightening Torque - Skid Generic Bolt						
	Carbon steel					Stainless Steel
Material Type	**A307 Gr. A**	**Class 4.8 UNI 3740**	**Class 5.8 UNI 3740**	**Class 8.8 UNI 3740**	**Class 10.9 UNI 3740**	**A4-70 ISO 3506**
Yield strength [ksi]	**36**	**46**	**58**	**93**	**131**	**65**
friction coefficient [-]	**0.15**					**0.225**
Bolt dimension [in]	**Torque value [ft lb]**					
1/4" x 20 UNC	4	5	6	10	15	10
5/16" x 18 UNC	7	10	10	20	25	20
3/8" x 16 UNC	15	15	20	35	45	35
1/2" x 13 UNC	30	40	50	80	110	80
5/8" x 11 UNC	60	80	100	160	220	160
3/4" x 10 UNC	110	140	170	280	390	280
7/8" x 9 UNC	170	220	280	440	620	450
1" x 8 UNC	260	330	410	660	930	670
1 1/8" x 8 UN	370	480	600	960	1350	980
1 1/4" x 8 UN	520	670	830	1350	1900	1350
1 3/8" x 8 UN	600	770	960	1550	2150	1600
1 1/2" x 8 UN	800	1000	1300	2050	2900	2100
1 5/8" x 8 UN	1200	1550	1950	3100	4350	3200
1 3/4" x 8 UN	1500	1950	2400	3850	5450	4000
1 3/4" x 12 UN	1550	2000	2500	4000	5600	4150
1 7/8" x 8 UN	1850	2400	3000	4800	6750	4950
2" x 8 UN	2300	2900	3650	5850	8200	6050
2" x 12 UN	2350	3000	3750	6000	8400	6250
2 1/4" x 12 UN	3350	4250	5350	8550	12000	8900
2 1/2" x 8 UN	4500	5750	7200	11500	16200	11950

COPY COMPLIANT to the original document resident on the computer system at the time of printing

Table 49: Lubricated Tightening Torque – Anchor Bolt (metric).

Lubricated Tightening Torque Anchor Bolt	
Internal Bolt Stress 207 MPa	
Bolt dimension [mm]	**Torque value [Nm]**
M12	40
M16	80
M20	140
M22	220
M24	330
M27	480
M30	680
M39	1100
M45	2050
M52	3000
M56	4300
M64	6000
All torque values are based on anchor bolts with threads well-lubricated with mineral oil (NOT anti-seize compound). The use of anti-seize compound will reduce these torque values.	

Table 50: Lubricated Tightening Torque – Anchor Bolt (imperial).

Lubricated Tightening Torque Anchor Bolt	
Internal Bolt Stress 30,000 psi	
Bolt dimension [in]	**Torque value [ft lb]**
1/2"	30
5/8"	60
3/4"	100
7/8"	160
1"	245
1 1/8"	355
1 1/4"	500
1 1/2"	800
1 3/4"	1500
2"	2200
2 1/4"	3180
2 1/2"	4400
All torque values are based on anchor bolts with threads well-lubricated with mineral oil (NOT anti-seize compound). The use of anti-seize compound will reduce these torque values.	

COPY COMPLIANT to the original document resident on the computer system at the time of printing